09-099 PVC Button 13.9 mm

HF/ultrasonic weldable button



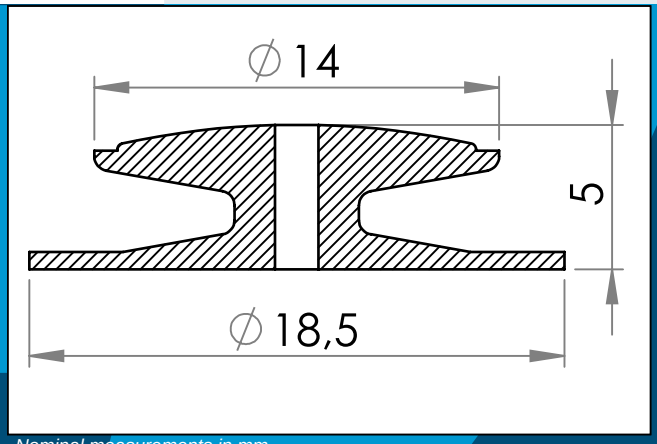

Nominal measurements in mm

HF/ultrasonic weldable button.

Both the material and the geometry of the PVC button are optimized for High frequency welding. Welding times of 1.5 – 2 seconds are typical, depending on the HF generator used and the thickness of the material used.

Materials:	PVC
Std. packaging:	1 x 25.000
Related products:	01-055, 01-112

Interested in other colors or materials? Please call for quote...

Carmo A/S, Hoejvangen 19, DK-3060 Espergaerde, Denmark
T: +45 4912 2100, F: +45 4912 2199, E: denmark@carmo.dk
www.carmo.dk

More info https://www.carmo.dk/en/technical-components/buttons/plastic-buttons-buttonholes/09-099/
All geometrical dimensions and functional information are indicative. (Unless tolerances are specified).
Carmo is not responsible for misprints and technical changes.
2026-11-26 10:55:53 UTC