04-112 PVC Eyelet 6.5 mm

6.5 mm Plastic eyelet with square shoulders. Typically used as hole reinforcements in banners, tarpaulins, building wraps etc.



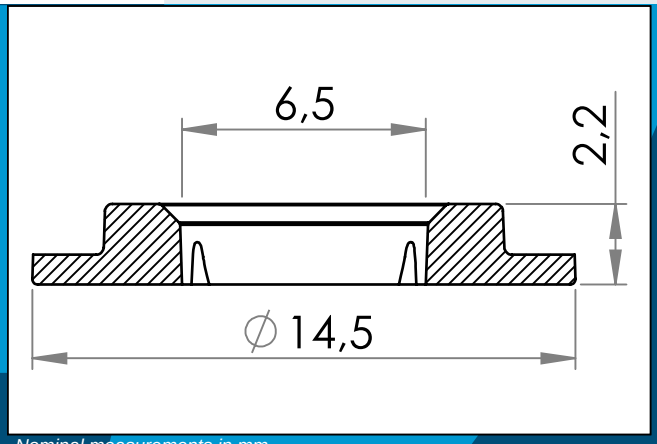

Nominal measurements in mm

6.5 mm Plastic eyelet with square shoulders.
Typically used for hole reinforcements in banners, tarpaulins, building wraps etc. Geometry and material optimised for High Frequency (HF) welding.
HF Welded PVC and plastic eyelets will fuse together with the foil and result in a joint that is significantly stronger and can withstand significantly higher pull forces than metal eyelet. This is especially true when working in mesh materials.
PVC and plastic eyelets will not tear out and will not rust and stain the material. They can be colour matched to the fabric and will make recycling of PVC and vinyl banners much easier.

Materials: PZ33, standard PVC compound, hardness 45+/-2 Shore D, PY28, modified for operating temperatures down to –20°C, hardness 51+/-2 Shore D

Materials:	PVC
Std. packaging:	2 x 20.000
Related products:	04-111,04-100,04-276

Interested in other colors or materials? Please call for quote...

Carmo A/S, Hoejvangen 19, DK-3060 Espergaerde, Denmark
T: +45 4912 2100, F: +45 4912 2199, E: denmark@carmo.dk
www.carmo.dk

More info https://www.carmo.dk/en/technical-components/grommets-and-eyelets/plastic-eyelets-round/04-112/
All geometrical dimensions and functional information are indicative. (Unless tolerances are specified).
Carmo is not responsible for misprints and technical changes.
2026-11-23 10:04:04 UTC