03-199 PVC Threaded tube connector with G 3/4" pipe thread

For attachment of tubing directly to the 03-601 flange. G 3/4" pipe thread, smooth body



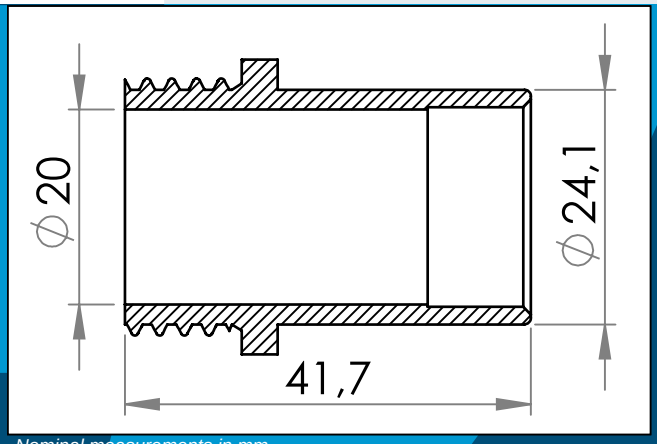

Nominal measurements in mm

For attachment of tubing directly to the 03-601 flange. G 3/4" pipe thread, smooth body

Fits with the weldable flange 03-601 and can be used to attach piping to a contruction for filling or draining water or air.

After filling, the port kan be closed using one of the caps in the modular valve assortment.

Tube attachment by push fit or gluing (e.g. PVC tubing by cyklohexanone)

Materials:	PVC
Std. packaging:	2 x 500
Fits with:	Threaded plastic flange with thread G 3/4", Spare O-Ring for 03-645, 03-199

Interested in other colors or materials? Please call for quote...

Carmo A/S, Hoejvangen 19, DK-3060 Espergaerde, Denmark
T: +45 4912 2100, F: +45 4912 2199, E: denmark@carmo.dk
www.carmo.dk

All geometrical dimensions and functional information are indicative. (Unless tolerances are specified).
Carmo is not responsible for misprints and technical changes.