02-331 PA Snap Fastener, female (medium closing strength)

Female snap fastener for click connections. with medium closing strength



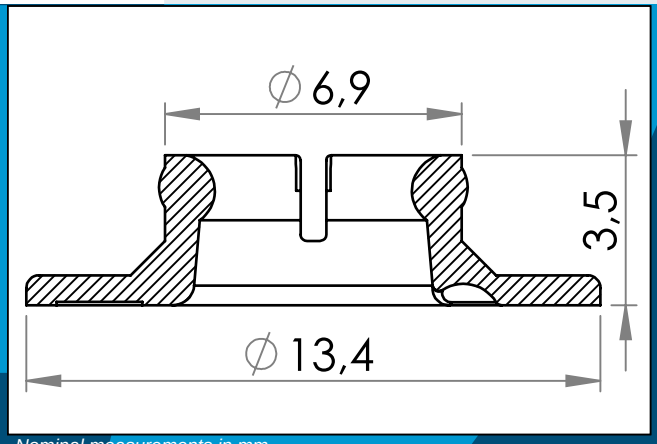

Nominal measurements in mm

Nylon snap fastener - female part. Snaps together with male part 02-031 to form a join click connection with medium closing strength. Can be re-opened and re-used without tools.

Materials:	PA
Std. packaging:	2 x 25.000
Fits with:	PA / Nylon plastic Snap fastener, male, PVC Washer For snapfastener 02-331, 02-431

Interested in other colors or materials? Please call for quote...

Carmo A/S, Hoejvangen 19, DK-3060 Espergaerde, Denmark
T: +45 4912 2100, F: +45 4912 2199, E: denmark@carmo.dk
www.carmo.dk

More info https://www.carmo.dk/en/technical-components/buttons/plastic-snap-fasteners/02-331/
All geometrical dimensions and functional information are indicative. (Unless tolerances are specified).
Carmo is not responsible for misprints and technical changes.
2026-11-26 10:53:59 UTC