# 02-031 PA / Nylon plastic Snap fastener, male

Nylon snap fastener, male part. Forms a re-usable click connection. Together with matching female parts 02-331 and 02-431



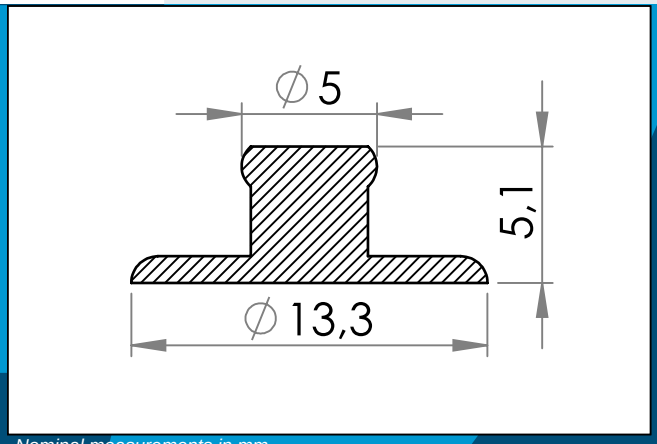


*Nominal measurements in mm*

Nylon snap fastener - male part. Fits with matching female parts 02-331 and 02-431 depending on the closing strength needed. Forms a re-usable click connection. Can be re-opened and re-used without tools.

| | |
|---|---|
| Materials: | PA |
| Std. packaging: | 2 x 25.000 |
| Fits with: | PVC Washer For 02-031, PA Snap Fastener, female (medium closing strength), PA / Nylon Snapfastener, female (heavy closing strength) |

Interested in other colors or materials? Please call for quote...

Carmo A/S, Hoejvangen 19, DK-3060 Espergaerde, Denmark
T: +45 4912 2100, F: +45 4912 2199, E: denmark@carmo.dk
www.carmo.dk


*All geometrical dimensions and functional information are indicative. (Unless tolerances are specified).*
*Carmo is not responsible for misprints and technical changes.*